IN-GROUND LIGHT 85-265 VAC 6W LED MODEL IN-50L-6

Specification-grade direct burial landscape lighting, wet-location luminaire for up lighting applications.

- 6 Watts
- 720 Lumens
- 85-265 VAC, Internal Meanwell driver
- 6 x 1 Watt Bridgelux LED
- 15°, 30°, 45°, 60° beams
- 2700K, 3000K or 4000K
- Die-cast aluminum housing, stainless steel top
- Stainless steel hardware
- Tempered clear glass lens
- Mounting: In Ground / Concrete Pour housing included
- Wet location IP67
- UL Certification
- Dimensions: 4 3/4" dia. x 3 ¾" height
- Warranty: 5 Years.

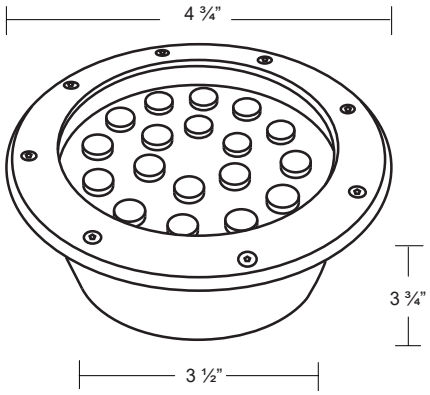

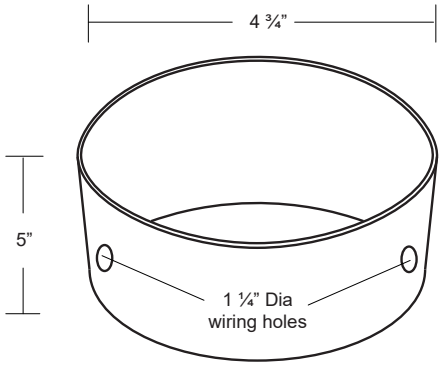

Housing Included

Specifications:

LAMPING: 6 x 1 Watt Bridgelux LED

MODEL: IN - 50L-6

MATERIAL: Die-cast aluminum housing, Stainless Steel Top

VOLTAGE: 85-265 VAC

WATTAGE: 6 Watts

Ordering Logic:

MODEL	WATTAGE	KELVIN	BEAM
IN - 50L	6 - 6 Watts	27 - 2700K	15 - 15°
		30 - 3000K	30 - 30°
		40 - 4000K	45 - 45°
			60 - 60°

ORDERING EXAMPLE: IN - 50L - 6 - 27 - 15

Excelsior Lighting, Inc.

PROJECT

TYPE

2507 N. Bundy Drive Fresno, CA 93727 T - 559.346.1051 F - 559.346.1071 excelsiorlighting.com