UP LIGHT 12V MR16 35W 8W LED MODEL UL-3

Specification-grade landscape lighting, wet-location luminaire for up lighting or down lighting applications. Can be utilized for ground mounted, tree mounted or surface mounted installations.

- Machined 6061-T6 copper-free aluminum. Aluminum components are black anodized, then a polyester powder coat finish is applied.
- Seven standard TGIC powder coat finishes and clear anodized finish available.
- Remote transformer required.
- Stainless steel hardware.
- 10” 18ga. Teflon coated wire leads.
- GY 6.35 bi pi socket
- 1/2” NPS Mount Threads (Mount not included).
- Tempered clear glass lens.
- Flush lens cap holds 3 lens accessories.
- High-temperature silicone O-ring seal used to seal the cap against the body.
- Molded silicone wire pass-thru attached to socket wire prevents wicking and water leaking into the lamp compartment.
- Listed for wet location use.
- Warranty: 10 Years.

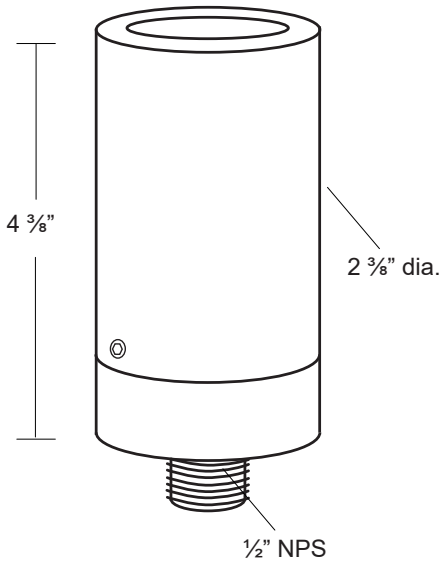

Made in USA

Specifications

MODEL:	UL-3
MATERIAL:	6061-T6 Aluminum
VOLTAGE:	12V
WATTAGE:	35 Watt
SOCKET:	GY 6.35 Bi-pin porcelain socket rated 600V, 250°C 18 ga, Teflon® coated leads.
LAMPING:	MR16 Halogen, 35W Maximum (order separately) 8W LED (order separately)

Ordering Logic:

MODEL	METAL	FINISH	
UL - 3	A - Aluminum	BK - Black	BKT - Black Texture
		BZ - Bronze	BZT - Bronze Texture
		WT - White	SL - Silver
		BG - Beige	AC - Aged Copper

ORDERING EXAMPLE: UL - 3 - A - BK

Excelsior Lighting, Inc.

PROJECT

TYPE

2507 N. Bundy Drive Fresno, CA 93727 T - 559.346.1051 F - 559.346.1071 excelsiorlighting.com