DUAL WALL MOUNT 120V PAR20 50W 11W LED MODEL WA-30

Specification-grade wet-location luminaire for wall mount applications.

- Machined 6061-T6 copper-free aluminum. Aluminum components are black anodized, then a polyester powder coat finish is applied.
- Seven standard TGIC powder coat finishes and clear anodized finish available.
- Stainless steel hardware.
- Junction box mount design.
- 10” 18ga. Teflon coated wire leads.
- Medium base ceramic socket.
- 1” regressed lens cap holds 2 lens accessories.
- Three mounting plate options.
- Clear tempered glass lens, glued in.
- High-temperature silicone O-ring seal used to seal the cap against the body.
- Listed for wet location use.
- Warranty: 10 Years.

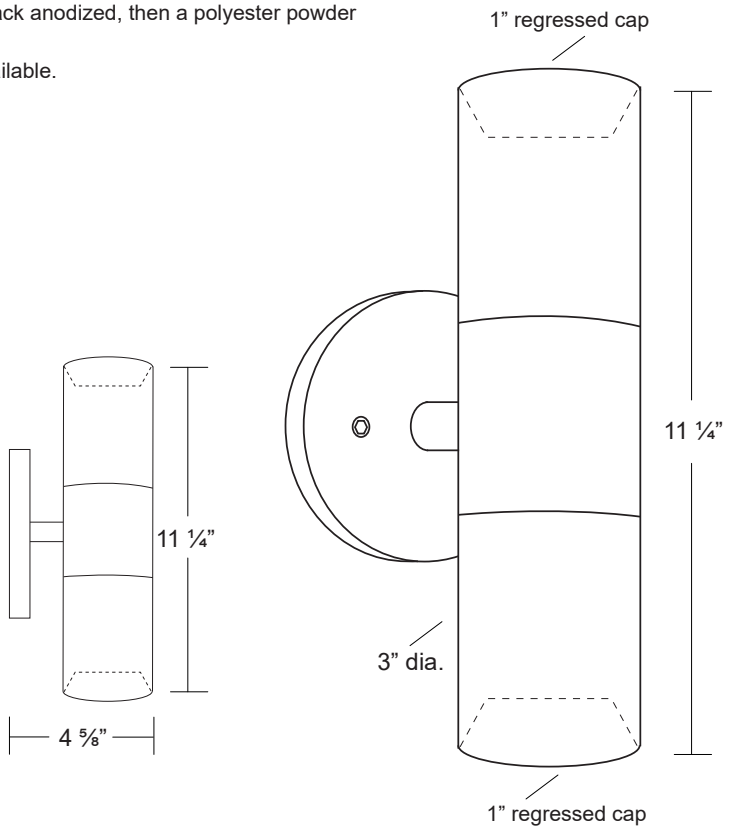

Mounting Plate Options:

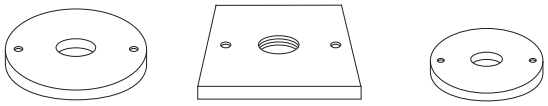

4/0 Round 5” dia. | 4/0 Square 5” Square | 3/0 Round 4” dia.

Made in USA

c UL us LISTED

Specifications

MODEL:	WA - 30
MATERIAL:	6061-T6 Aluminum
VOLTAGE:	120V
WATTAGE:	50 Watt (X2)
SOCKET:	Medium base ceramic socket rated 600V, 250°C 18 ga, Teflon® coated leads.
LAMPING:	PAR20 Halogen, 50W Maximum (X2)(order separately) 11W LED (X2)(order separately)

Ordering Logic:

MODEL	METAL	MOUNTING PLATE		FINISH	
WA - 30	A - Aluminum	1 - 4/0 Round 3 - 3/0 Round	2 - 4/0 Square	BK - Black BZ - Bronze WT - White BG - Beige	BKT - Black Texture BZT - Bronze Texture SL - Silver AC - Aged Copper

ORDERING EXAMPLE: WA - 30 - A - 1 - BK

Excelsior Lighting, Inc.

PROJECT:

TYPE:

2507 N. Bundy Drive Fresno, CA 93727 T - 559.346.1051 F - 559.346.1071 excelsiorlighting.com